Cambridge International AS & A Level

Cambridge International Examinations
Cambridge International Advanced Subsidiary and Advanced Level

CANDIDATE NAME									
CENTRE NUMBER						CANDIDATE NUMBER			

9549161616

PHYSICS **9702/21**

Paper 2 AS Level Structured Questions **October/November 2017**

1 hour 15 minutes

Candidates answer on the Question Paper.

No Additional Materials are required.

READ THESE INSTRUCTIONS FIRST

Write your Centre number, candidate number and name on all the work you hand in.
Write in dark blue or black pen.
You may use an HB pencil for any diagrams or graphs.
Do not use staples, paper clips, glue or correction fluid.
DO **NOT** WRITE IN ANY BARCODES.

Answer **all** questions.

Electronic calculators may be used.
You may lose marks if you do not show your working or if you do not use appropriate units.

At the end of the examination, fasten all your work securely together.
The number of marks is given in brackets [ ] at the end of each question or part question.

This document consists of **16** printed pages.

© UCLES 2017

CAMBRIDGE International Examinations

Data

speed of light in free space	$c = 3.00 \times 10^{8}\,\text{m s}^{-1}$
permeability of free space	$\mu_0 = 4\pi \times 10^{-7}\,\text{H m}^{-1}$
permittivity of free space	$\varepsilon_0 = 8.85 \times 10^{-12}\,\text{F m}^{-1}$
	$(\frac{1}{4\pi\varepsilon_0} = 8.99 \times 10^{9}\,\text{m F}^{-1})$
elementary charge	$e = 1.60 \times 10^{-19}\,\text{C}$
the Planck constant	$h = 6.63 \times 10^{-34}\,\text{J s}$
unified atomic mass unit	$1\,\text{u} = 1.66 \times 10^{-27}\,\text{kg}$
rest mass of electron	$m_e = 9.11 \times 10^{-31}\,\text{kg}$
rest mass of proton	$m_p = 1.67 \times 10^{-27}\,\text{kg}$
molar gas constant	$R = 8.31\,\text{J K}^{-1}\,\text{mol}^{-1}$
the Avogadro constant	$N_A = 6.02 \times 10^{23}\,\text{mol}^{-1}$
the Boltzmann constant	$k = 1.38 \times 10^{-23}\,\text{J K}^{-1}$
gravitational constant	$G = 6.67 \times 10^{-11}\,\text{N m}^2\,\text{kg}^{-2}$
acceleration of free fall	$g = 9.81\,\text{m s}^{-2}$

© UCLES 2017

Formulae

uniformly accelerated motion	$s = ut + \frac{1}{2}at^2$ $v^2 = u^2 + 2as$
work done on/by a gas	$W = p\Delta V$
gravitational potential	$\phi = -\frac{Gm}{r}$
hydrostatic pressure	$p = \rho gh$
pressure of an ideal gas	$p = \frac{1}{3}\frac{Nm}{V}\langle c^2 \rangle$
simple harmonic motion	$a = -\omega^2 x$
velocity of particle in s.h.m.	$v = v_0 \cos \omega t$ $v = \pm \omega \sqrt{(x_0^2 - x^2)}$
Doppler effect	$f_o = \frac{f_s v}{v \pm v_s}$
electric potential	$V = \frac{Q}{4\pi\varepsilon_0 r}$
capacitors in series	$1/C = 1/C_1 + 1/C_2 + \ldots$
capacitors in parallel	$C = C_1 + C_2 + \ldots$
energy of charged capacitor	$W = \frac{1}{2}QV$
electric current	$I = Anvq$
resistors in series	$R = R_1 + R_2 + \ldots$
resistors in parallel	$1/R = 1/R_1 + 1/R_2 + \ldots$
Hall voltage	$V_H = \frac{BI}{ntq}$
alternating current/voltage	$x = x_0 \sin \omega t$
radioactive decay	$x = x_0 \exp(-\lambda t)$
decay constant	$\lambda = \frac{0.693}{t_{\frac{1}{2}}}$

© UCLES 2017

[Turn over

Answer **all** the questions in the spaces provided.

1 **(a)** The drag force F_D acting on a sphere moving through a fluid is given by the expression

$$F_D = K\rho v^2$$

where K is a constant,
ρ is the density of the fluid
and v is the speed of the sphere.

Determine the SI base units of K.

base units .....[3]

(b) A ball of weight 1.5 N falls vertically from rest in air. The drag force F_D acting on the ball is given by the expression in **(a)**. The ball reaches a constant (terminal) speed of 33 m s^{-1}.

Assume that the upthrust acting on the ball is negligible and that the density of the air is uniform.

For the instant when the ball is travelling at a speed of 25 m s^{-1}, determine

(i) the drag force F_D on the ball,

F_D = ... N [2]

(ii) the acceleration of the ball.

acceleration = ... m s^{-2} [2]

© UCLES 2017

(c) Describe the acceleration of the ball in **(b)** as its speed changes from zero to $33\,m\,s^{-1}$.

.....

.....

.....

.....[3]

[Total: 10]

2 The variation with time t of the velocity v of two cars P and Q is shown in Fig. 2.1.

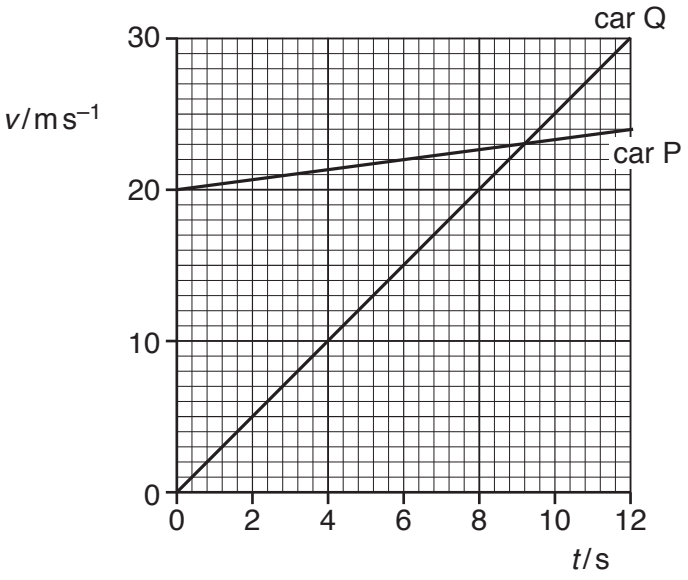

Fig. 2.1

The cars travel in the same direction along a straight road.
Car P passes car Q at time $t = 0$.

(a) The speed limit for cars on the road is 100 km h^{-1}. State and explain whether car Q exceeds the speed limit.

.....[1]

(b) Calculate the acceleration of car P.

acceleration = ... m s^{-2} [2]

© UCLES 2017

(c) Determine the distance between the two cars at time $t = 12\,s$.

distance = ... m [3]

(d) From time $t = 12\,s$, the velocity of each car remains constant at its value at $t = 12\,s$.

Determine the time t at which car Q passes car P.

t = ... s [2]

[Total: 8]

3 **(a)** State the difference between a stationary wave and a progressive wave in terms of

(i) the energy transfer along the wave,

.....

.....[1]

(ii) the phase of two adjacent vibrating particles.

.....

.....[1]

(b) A tube is open at both ends. A loudspeaker, emitting sound of a single frequency, is placed near one end of the tube, as shown in Fig. 3.1.

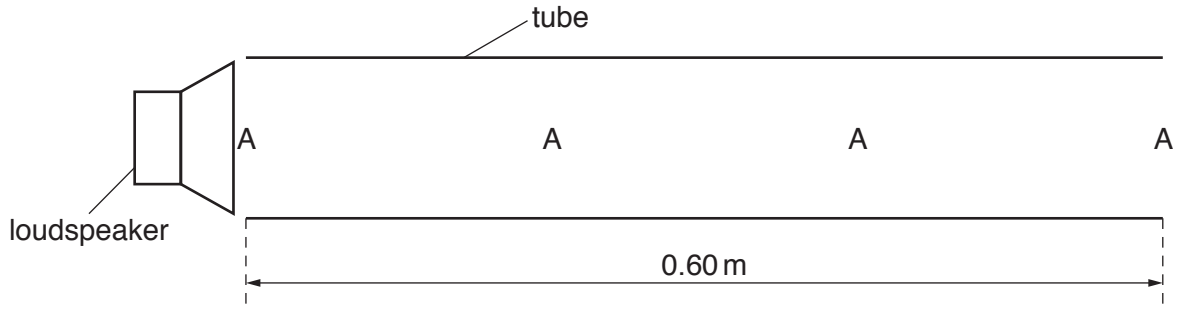

Fig. 3.1

The speed of the sound in the tube is 340 m s^{-1}. The length of the tube is 0.60 m.
A stationary wave is formed with an antinode A at each end of the tube and two antinodes inside the tube.

(i) State what is meant by an *antinode* of the stationary wave.

.....

.....[1]

(ii) State the distance between a node and an adjacent antinode.

distance = ... m [1]

(iii) Determine, for the sound in the tube,

1. the wavelength,

wavelength = ... m [1]

© UCLES 2017

2. the frequency.

frequency = ... Hz [2]

(iv) Determine the minimum frequency of the sound from the loudspeaker that produces a stationary wave in the tube.

minimum frequency = ... Hz [2]

[Total: 9]

4 **(a)** Define *strain*.

.....

.....[1]

(b) A wire is designed to ensure that its strain does not exceed 4.0×10^{-4} when a force of 8.0 kN is applied. The Young modulus of the metal of the wire is 2.1×10^{11} Pa. It may be assumed that the wire obeys Hooke's law.

For a force of 8.0 kN, calculate, for the wire,

(i) the maximum stress,

maximum stress = ... Pa [2]

(ii) the minimum cross-sectional area.

minimum cross-sectional area = ... m^2 [2]

[Total: 5]

© UCLES 2017

5 Three cells of electromotive forces (e.m.f.) E_1, E_2 and E_3 are connected into a circuit, as shown in Fig. 5.1.

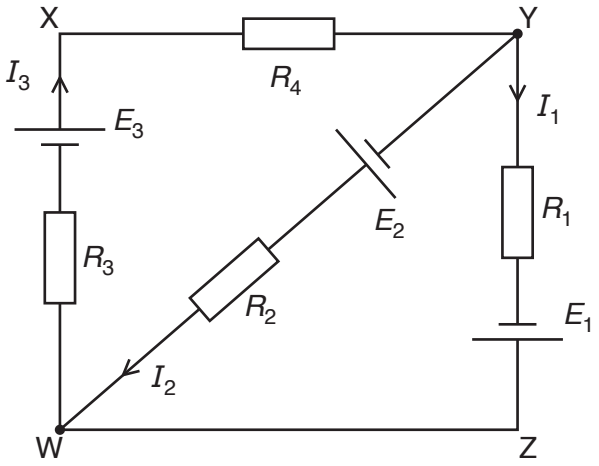

Fig. 5.1

The circuit contains resistors of resistances R_1, R_2, R_3 and R_4.
The currents in the different parts of the circuit are I_1, I_2 and I_3.
The cells have negligible internal resistance.

Use Kirchhoff's laws to state an equation relating

(a) I_1, I_2 and I_3,

.....[1]

(b) E_1, E_3, R_1, R_3, R_4, I_1 and I_3 in loop WXYZW,

.....

.....[1]

(c) E_1, E_2, R_1, R_2, I_1 and I_2 in loop YZWY.

.....

.....[1]

[Total: 3]

© UCLES 2017

[Turn over

6 **(a)** Define *electric field strength*.

.....

.....[1]

(b) Two parallel metal plates in a vacuum are separated by a distance of 15 mm, as shown in Fig. 6.1.

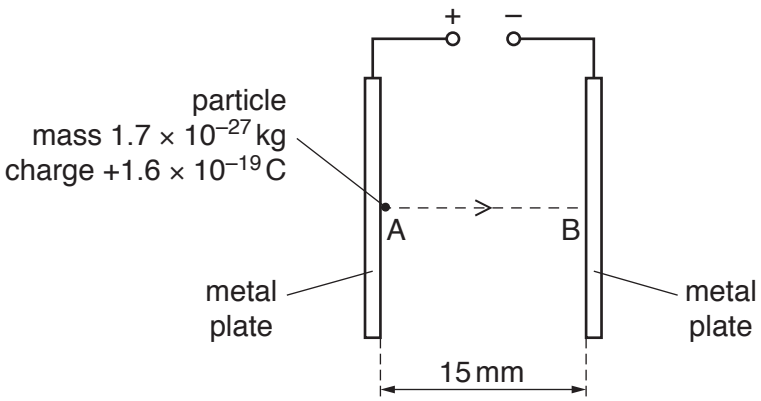

Fig. 6.1

A uniform electric field is produced between the plates by applying a potential difference between them.

A particle of mass 1.7×10^{-27} kg and charge $+1.6 \times 10^{-19}$ C is initially at rest at point A on one plate. The particle is moved by the electric field to point B on the other plate. The particle reaches point B with kinetic energy 2.4×10^{-16} J.

(i) Calculate the speed of the particle at point B.

speed = ... $m\,s^{-1}$ [2]

(ii) State the work done by the electric field to move the particle from A to B.

work done = ... J [1]

© UCLES 2017

(iii) Use your answer in **(ii)** to determine the force on the particle.

force = ... N [2]

(iv) Determine the potential difference between the plates.

potential difference = ... V [3]

(v) On Fig. 6.2, sketch a graph to show the variation of the kinetic energy of the particle with the distance x from point A along the line AB.
Numerical values for the kinetic energy are not required.

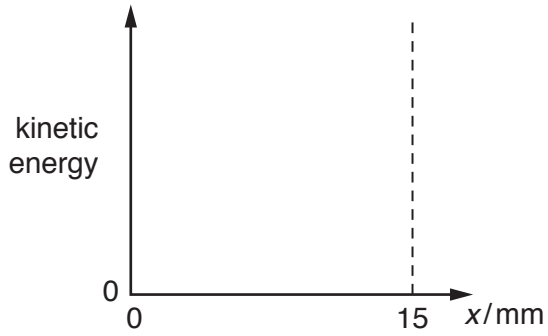

Fig. 6.2

[1]

[Total: 10]

7 **(a)** Define the *ohm*.

.....[1]

(b) Wires are used to connect a battery of negligible internal resistance to a lamp, as shown in Fig. 7.1.

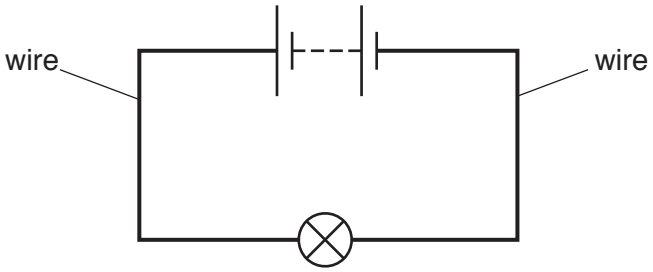

Fig. 7.1

The lamp is at its normal operating temperature. Some data for the filament wire of the lamp and for the connecting wires of the circuit are shown in Fig. 7.2.

	filament wire	connecting wires
diameter	d	$14\,d$
total length	L	$7.0\,L$
resistivity of metal (at normal operating temperature)	ρ	$0.028\,\rho$

Fig. 7.2

(i) Show that

$$\frac{\text{resistance of filament wire}}{\text{total resistance of connecting wires}} = 1000.$$

[2]

(ii) Use the information in **(i)** to explain qualitatively why the power dissipated in the filament wire of the lamp is greater than the total power dissipated in the connecting wires.

.....

.....

.....[1]

(iii) The lamp is rated as 12 V, 6.0 W. Use the information in **(i)** to determine the total resistance of the connecting wires.

total resistance of connecting wires = ... Ω [3]

(iv) The diameter of the connecting wires is decreased. The total length of the connecting wires and the resistivity of the metal of the connecting wires remain the same.

State and explain the change, if any, that occurs to the resistance of the filament wire of the lamp.

.....

.....

.....

.....

.....[3]

[Total: 10]

© UCLES 2017

[Turn over

8 A neutron within a nucleus decays to produce a proton, a β^- particle and an (electron) antineutrino.

$$n \longrightarrow p + \beta^- + \bar{\nu}$$

(a) Use the quark composition of the neutron to show that the neutron has no charge.

[3]

(b) Complete Fig. 8.1 by giving appropriate values of the charge and the mass of the proton, the β^- particle and the (electron) antineutrino.

	proton	β^- particle	antineutrino
charge			
mass			

Fig. 8.1

[2]

[Total: 5]

Permission to reproduce items where third-party owned material protected by copyright is included has been sought and cleared where possible. Every reasonable effort has been made by the publisher (UCLES) to trace copyright holders, but if any items requiring clearance have unwittingly been included, the publisher will be pleased to make amends at the earliest possible opportunity.

To avoid the issue of disclosure of answer-related information to candidates, all copyright acknowledgements are reproduced online in the Cambridge International Examinations Copyright Acknowledgements Booklet. This is produced for each series of examinations and is freely available to download at www.cie.org.uk after the live examination series.

Cambridge International Examinations is part of the Cambridge Assessment Group. Cambridge Assessment is the brand name of University of Cambridge Local Examinations Syndicate (UCLES), which is itself a department of the University of Cambridge.

© UCLES 2017